Acme Sanitary Ware Co. Ltd.
Since 1949
1/F, Acme Building, 22-28 Nanking Street, Kowloon, Hong Kong
Tel: 2388 7171 Fax: 2710 8012
Email: acme@acmesanitary.com.hk
Website: www.acmesanitary.com.hk

GLOBAL

PROJECT		REF		REV	ITEM CODE	
LOCATION		DATE			PAGE	

SANITARY WARE SPECIFICATION SHEET

Item Descriptions	Global (PRC) 304 Stainless steel wall hung single bowl sink with waste fittings
Dimensions	L406 x W316 x H164 mm (Overall) L336 x W240 x H164 mm (Bowl)
Model	L1911
Finish	Stainless Steel 304
Manufacturer	Global (PRC)
Source	Acme Sanitary Ware Co. Ltd Mr. Eric Wong/ Mr. Don Yuen
Contact Tel/Fax E-mail Website	(852) 2388-7171 / (852) 2710-8012 acme@acmesanitary.com.hk www.acmesanitary.com.hk

Illustration/ Drawing

Product Detail :

- Model : L1911
- Size (mm) : 406 mm x 316 mm x 164 mm
- Size (inch) : 12" x 16" x 6.5"
- 304 stainless steel single bowl

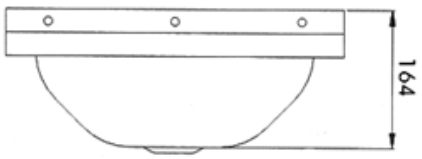

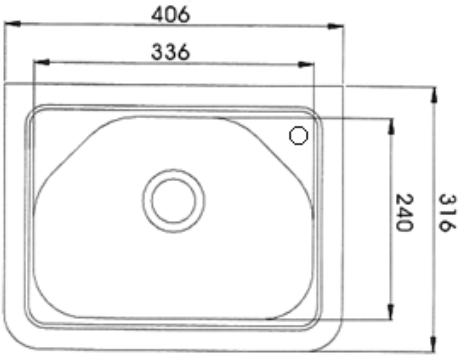

Note:

** All information of the above is for the reference only. No prior notice is made if any changes.*